CORDLESS DRILL DCD995 TYPE 2

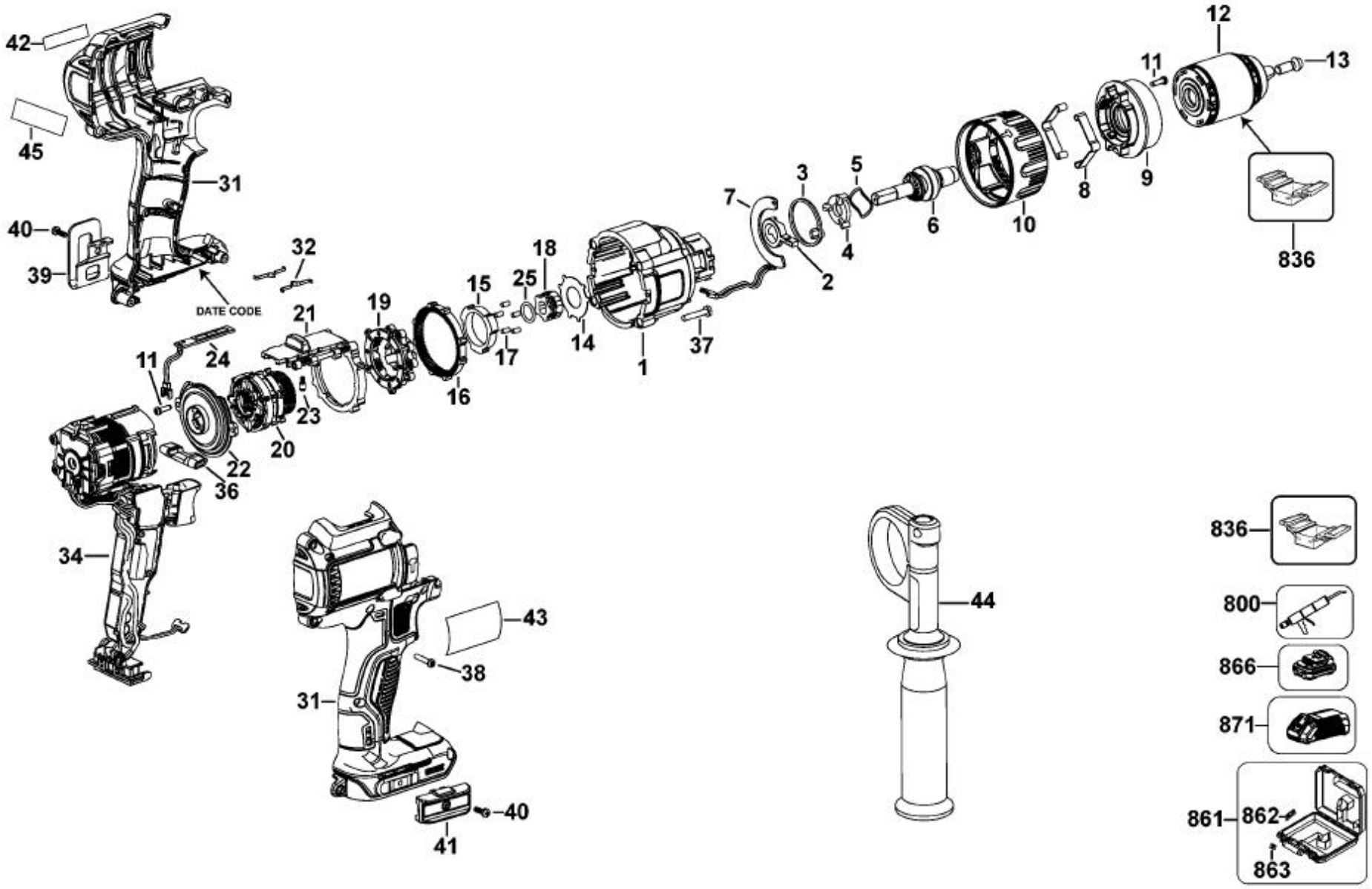

E17150.tif